NPS	L	d	D	D1	D2	b	f	n-Ød
8	457	200	345	298.5	269.9	27.0	2	8-Ø23
6	394	150	280	241.3	215.9	23.9	2	8-Ø23
5	356	125	255	215.9	185.7	22.3	2	8-Ø23
4	229	100	230	190.5	157.2	22.3	2	8-Ø19
3	203	78	190	152.4	127.0	17.5	2	4-Ø19
2-1/2	190	65	180	139.7	104.8	15.9	2	4-Ø19
2	178	49	150	120.7	92.1	14.3	2	4-Ø19
1-1/2	165	38	125	98.4	73.0	12.7	2	4-Ø16
1-1/4	140	32	115	88.9	63.5	11.2	2	4-Ø16
1	127	25	110	79.4	50.8	9.6	2	4-Ø16
3/4	117	20	100	69.9	42.9	8.9	2	4-Ø16
1/2	108	15	90	60.3	34.9	8.0	2	4-Ø16

No.	Name	Material
1	Bolt	A193 B7
2	Nut	A194 2H
3	Body	A216 WCB
4	Gasket	SS304+Graphite
5	Bonnet	A216 WCB
6	Seat	PTFE
7	Ball	SS304
8	Stem	A182 F6a
9	Anti-static	SS304
10	Thrust washer	PTFE
11	Packing	PTFE
12	Gland	A216 WCB
13	Locating bolt	A193 B7
14	Locating piece	C.S.
15	Handle	C.S

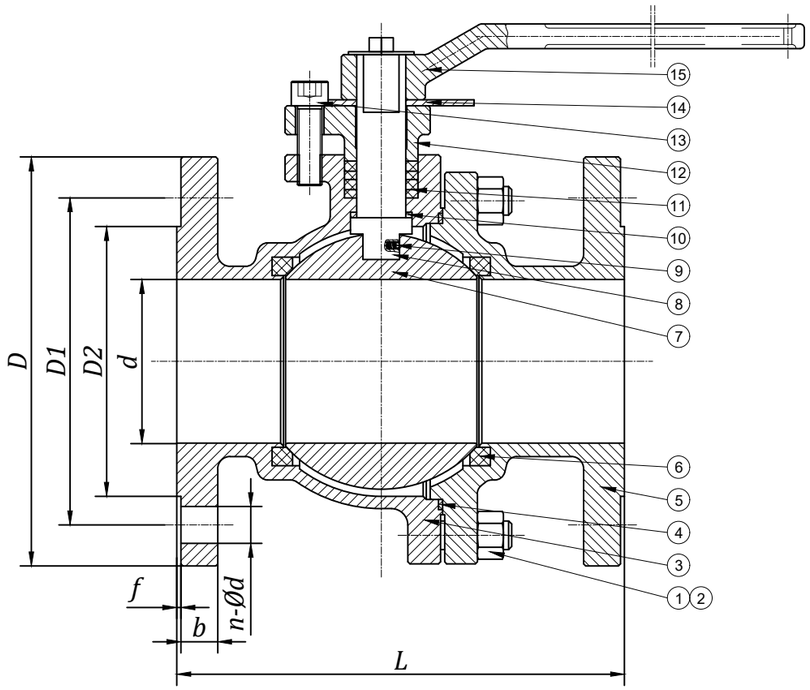

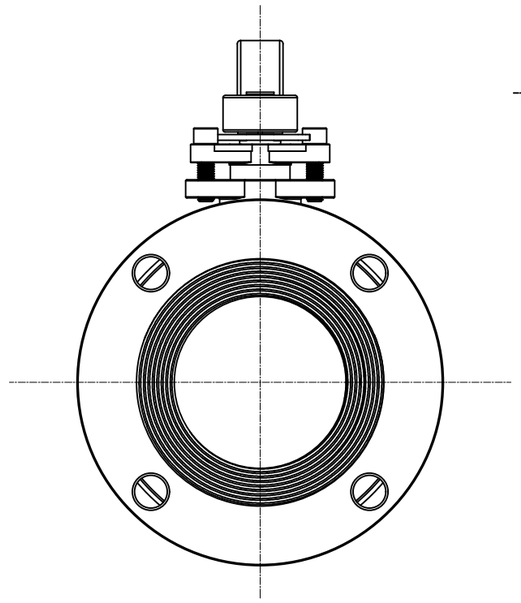

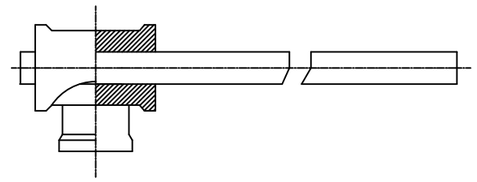

4"~8"

FIRE SAFE DESIGN

Before Fire Sealing After Fire Sealing

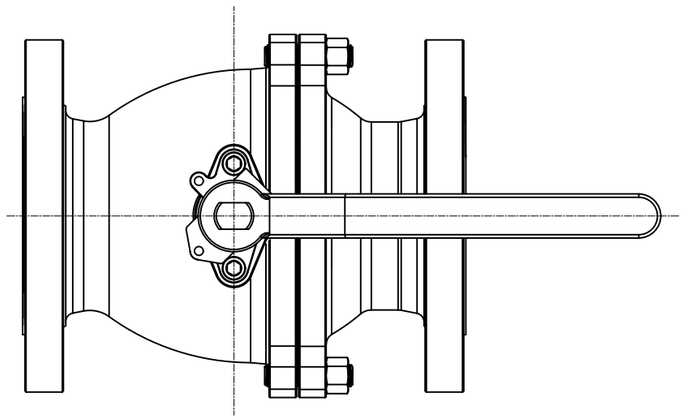

Technical Requirements

1. Design & Manufacture conform to API 608;
2. Temp. & Pressure conform to ASME B16.34;
3. Face to Face Dimension conform to ASME B16.10;
4. Flange Ends Dimension conform to ASME B16.5;
5. Fire-safe conform to API 607;
6. Inspection & Testing conform to API 598;

Performance Specification			
Pressure (Class)		150Lb	
Test Pressure	Strength Test	3.0	Mpa
	Seal Test	2.2	
	Air Seal Test	0.6	
Working Tempreture		-29～+120° C	
Medium Application		W.O.G	

CHECKED BY

PRINTED BY

OLD DRAWING NO.

BASED DRAWING NO.

DATE	SIGNATURE

CUSTOMER :

PO NO:

NOTE:The manufacturer keep the right to upgrade the design for purpose of design optimization but do not change installation dimension and key materials.

DRAWN			
CHECKED			
APPROVED			
DATE	2025/ /		

△ INDICATES CRUCIAL FEATURE

UNLESS OTHERWISE SPECFIED
1. ALL DIMENTIONS ARE IN MM
2. ALL PROJECTION ARE IN THIRD ANGLE
3. ALL SHARP EDGES ARE TO BE REMOVED

STAMP:

REV.	DATE	ALT.NO.	SIG.	SCALE	NTS

J-VALVES FLUID EQUIPMENT CO., LTD

Building 2, No. 12 Xingchao Road, Binhai Park, Longwan District, Wenzhou City,ZheJiang,P.R.China 325024
Phone: +86 0577-56692520

TITLE :– BALL VALVE GENERAL ASSEMBLY

SIZE	1/2" to 8"	TYPE:
CLASS	150LB	Float,Full bore,Bolted bonnet,RF

VPO CODE :	DRAWING NUMBER :–	REV.	SHEET NO:
--	JF-DR-	0	1 OF 1

*** THIS DRAWING AND DESIGN IS THE PROPERTY OF J–VALVES. IT IS A CONFIDENTIAL DISCLOSURE WHICH MUST NEITHER BE COPIED NOR USED IN ANY MANNER DETRIMENTAL TO THEIR INTERESTS.